HomeWork VI

1) Find the mathematical model of the following configuration

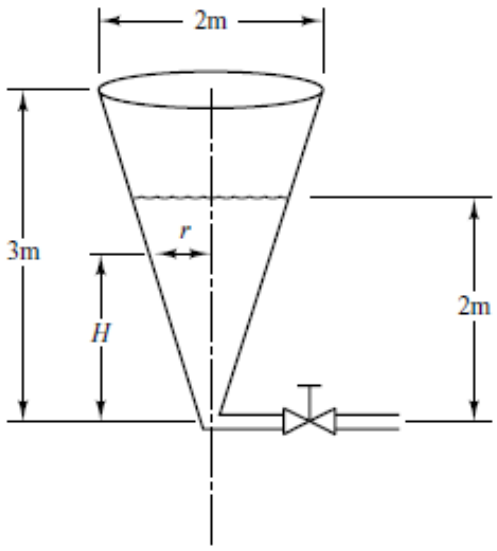

2) Consider the liquid-level system shown in the figure.

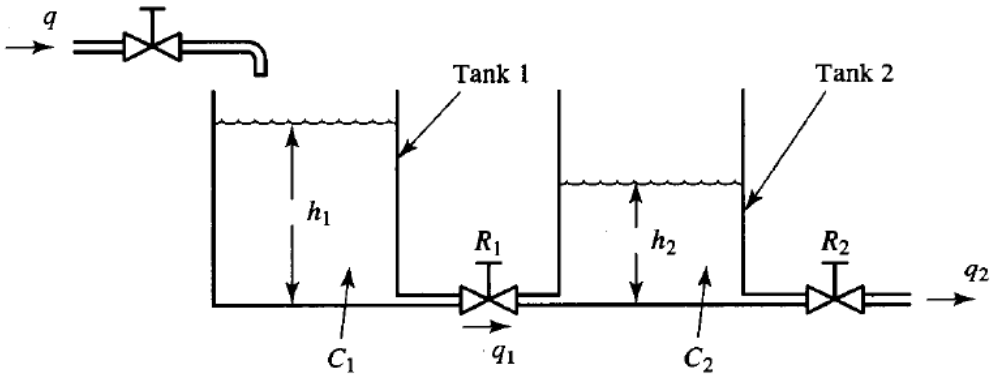

The capacitances of tank1 and tank2 are C_1 and C_2, respectively. The resistance of the valve between the tanks is R_1 and that of the out flow valve is R_2.
Derive mathematical models for the system when

a) q is the input and h_2 the output,
b) q is the input and q_2 the output and,
c) q is the input and h_1 the output.

3) Do the same for the following configuration.

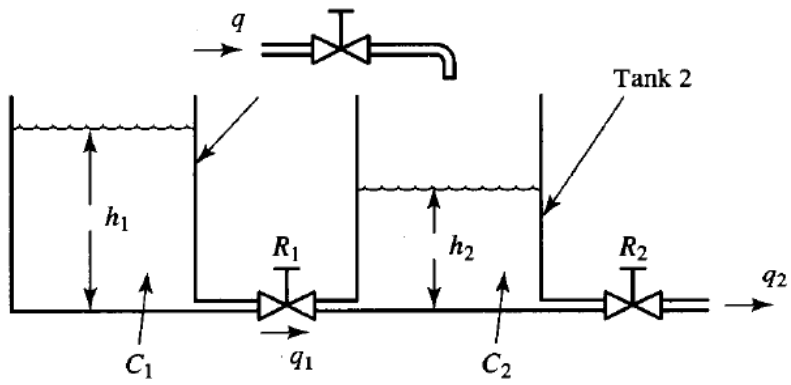

4) Mathematical modeling of the steam direct heating unit.

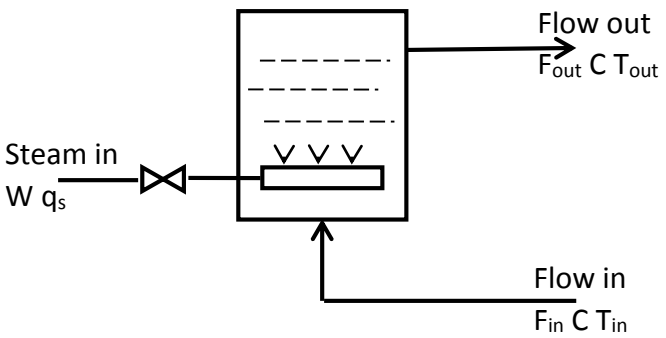

a) Develop the model according to the mass and energy balance.
b) Derive the relationship between the outlet temperature change and the change in the heat. q_s, brought in by the steam
c) Derive the relationships between the outlet temperature change and the disturbance from the inlet fluid flow rate F_{in} and inlet fluid temperature T_{in}.